INTIALS: EH
JOB NUMBER: 42614
DATE: 11/3/2022

MAIN FILE: –
DEPT: –
DEALER: –

PRODUCTION APPROVED

NOTES:
1. OVERALL HEIGHT IS IN LOADED CONDITION. UNLOADED HEIGHTS MAY BE 4" ABOVE HEIGHTS SHOWN.
2. DO NOT SCALE DRAWING.
3. ALL DIMENSIONS ARE APPROXIMATE AND SUBJECT TO ENGINEERING CHANGES.
4. DRAWING MAY OR MAY NOT SHOW ALL ITEMS AS DESCRIBED IN THE WRITTEN DETAIL SPECIFICATIONS.
5. INCLUSION OF AN ITEM ON THE DRAWING DOES NOT CONSTITUTE INCLUSION OF THAT ITEM WITH THE FINAL DELIVERED UNIT.

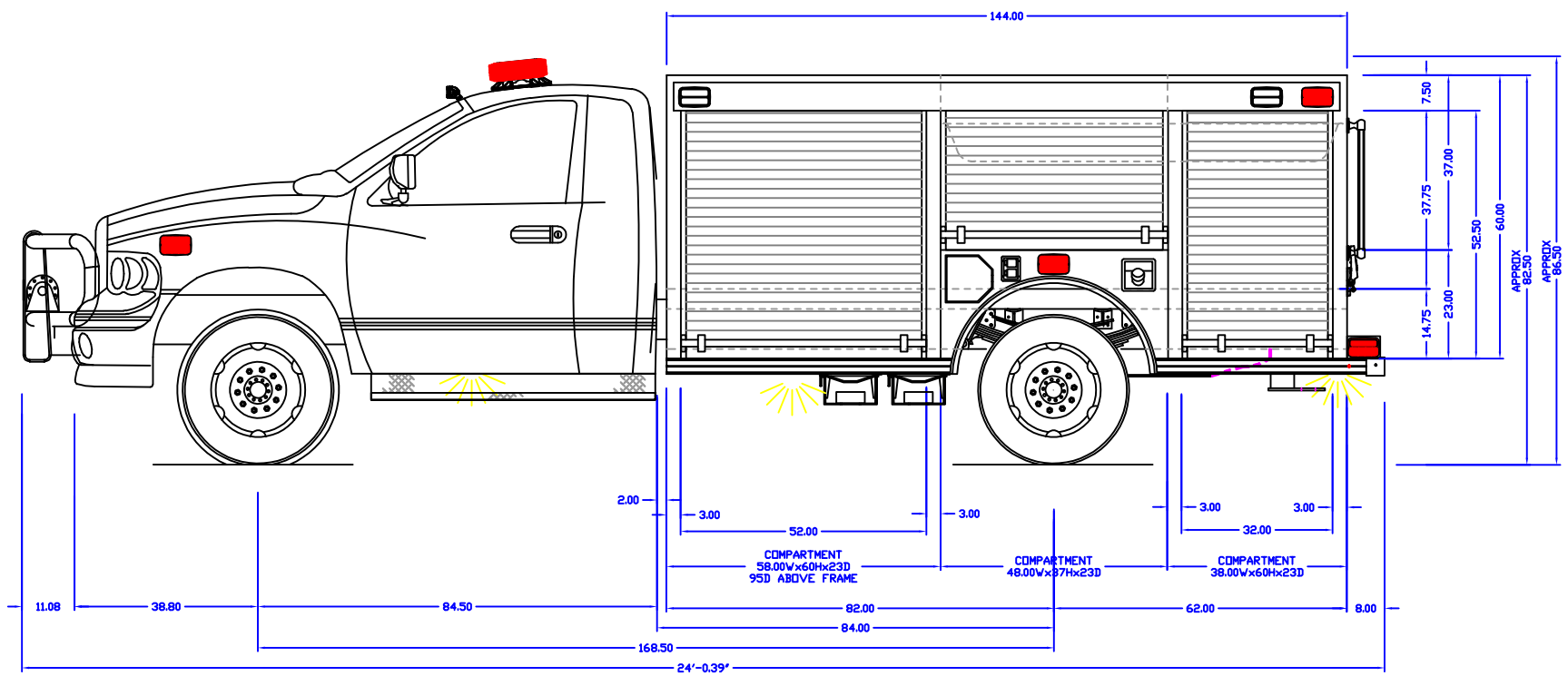

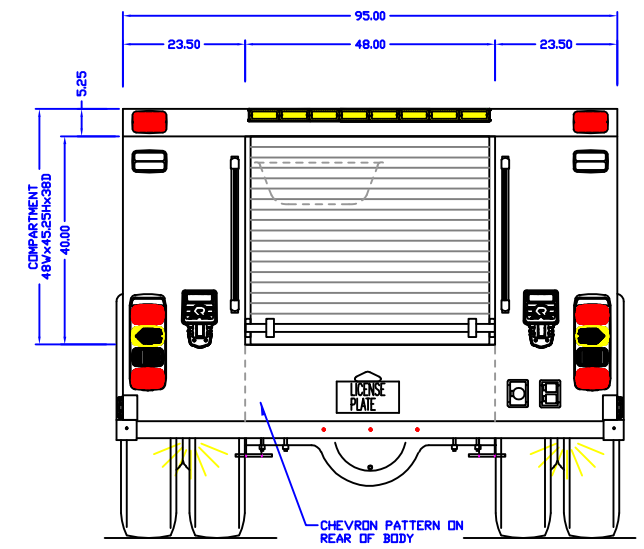

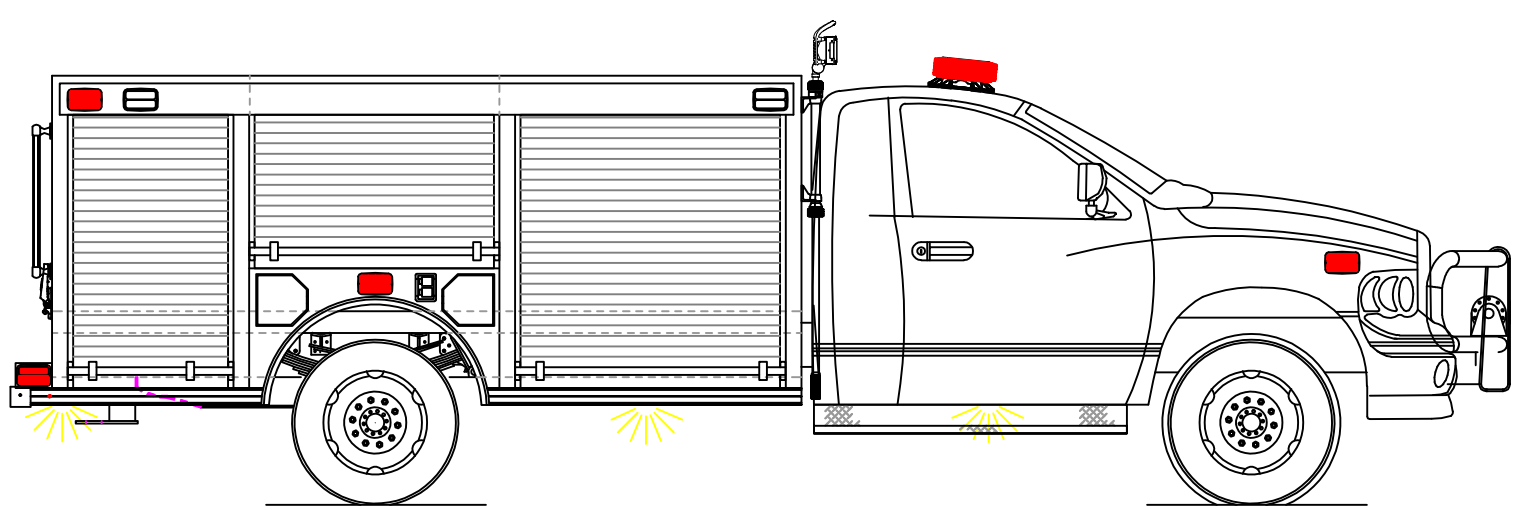

APPROVED BY:	
CHASSIS:	RAM
PUMP:	NA
TANK:	NA
PANEL MATL:	NA
COMP INTERIOR:	SPATTER PAINT
MAXIMUM HEIGHT	NONE
MAXIMUM LENGTH	NONE
BODY WIDTH	95"

DRAWN: –	DATE: –	
DRAWN: BVZ	DATE: 1/24/22	

PROPRIETARY AND CONFIDENTIAL
THE INFORMATION CONTAINED IN THIS DRAWING IS THE SOLE PROPERTY OF ROSEBAUER. ANY REPRODUCTION IN PART OR AS A WHOLE WITHOUT THE WRITTEN PERMISSION OF ROSENBAUER IS PROHIBITED.

ARLEY, AL

rosenbauer

ROSENBAUER MINI 1/8"

DRAWING NUMBER: ARLEY, AL

REV: –